IP3 Top Terminal Battery Cabinet

Features:

Designed for 384VDC and 360VDC nominal battery systems

- c UL us LISTED UL Listed 5th Edition.
- IBC 2018 Seismic Certified.
- Designed for 32-30 standard 12 volt top terminal batteries in 384VDC or 360VDC nominal configuration.
- One of the tightest footprints available. A space saving footprint saves valuable equipment room floor space.
- Cabinet mechanical features:
  - Welded heavy gauge steel.
  - Acid resistant powder coat epoxy paint.
  - Doors and panels are removable, easing installation and maintenance.
  - Front and back of cabinet is accessible to standard material handling equipment.
  - Can be installed in single or multiple cabinet lineup.
  - Locking right door has pocket to hold manuals and maintenance records.
  - Designed to accommodate monitor harness installation.
  - Dedicated area for electrical output connections and cable routing.
  - Improved ventilation through rear, top, and side panels.
  - Removable side panels are designed as universal for installation on either side of frame.
  - Batteries are accessible from all sides of the cabinet.
- System electrical features:
  - DC rated breakers in each cabinet with UVR or Shunt Trip and Aux Contacts.
  - Breaker installed horizontally to lessen the chance of opening during a seismic event.
  - Accommodates multiple manufacturers' breaker designs.
  - Removable breaker mount for other optional output connections.
- Optional items include:
  - Floorstands
  - Seismic Anchor Brackets
  - Spill Containment Pan System
  - Installation of battery monitors or harnesses
  - Junction cabinets for one connection point to the UPS
  - Forced air fan assemblies

For applications assistance, please contact sales@IntraPack.com or call 214-348-7105

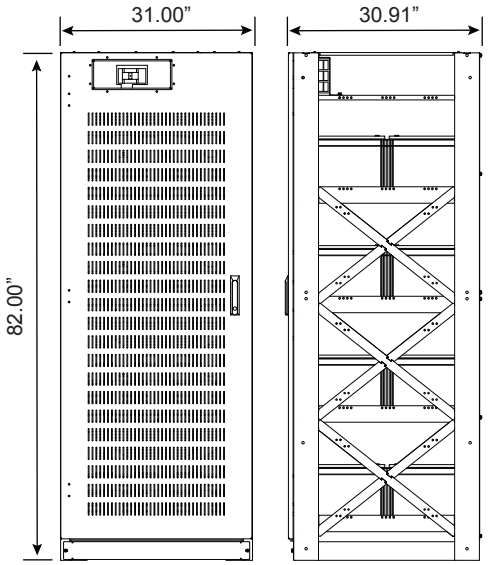

Dimensions shown for the frame only

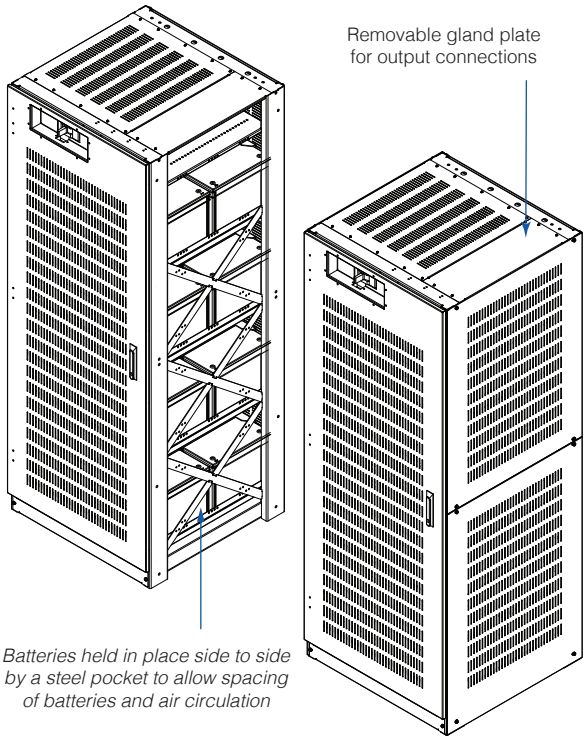

Top view and bottom view shown with panels. Each panel adds 0.09" to the width.

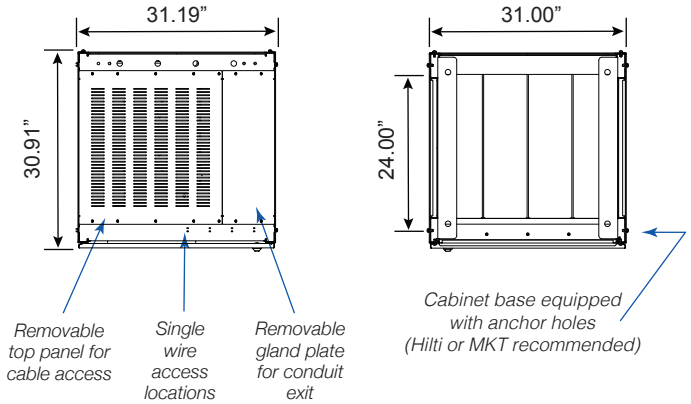

Effective Date: 04/09/20

IntraPack® *An Investment in Reliability.*

IntraPack Industries • 10650 Markison Road • Dallas, Texas 75238 - 1338
Tel: 214-348-7105 • Fax: 214-348-7115 • Email: sales@IntraPack.com